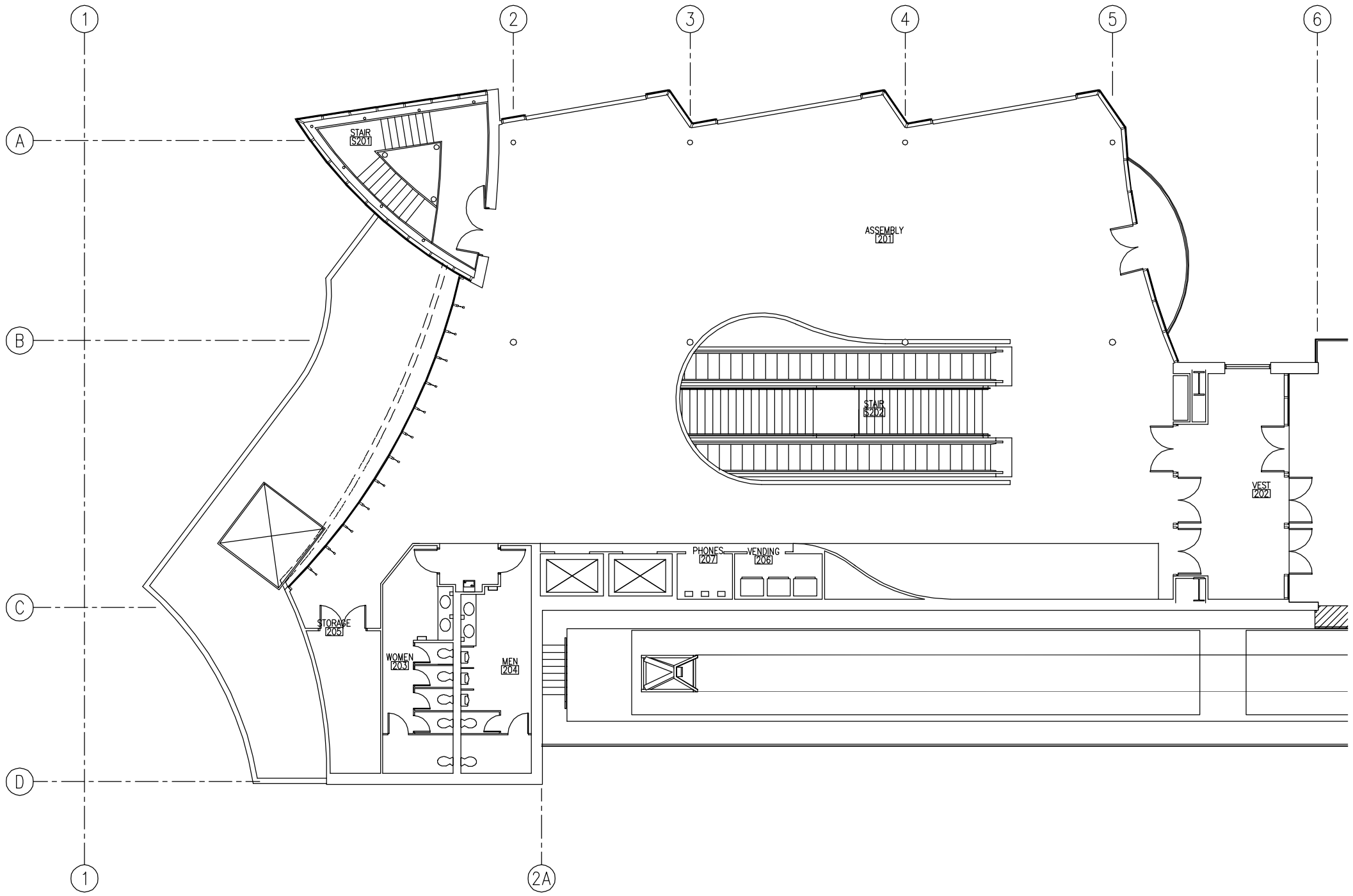


**ALASKA RAILROAD CORPORATION**
**OFFICE OF THE CHIEF ENGINEER**
P.O.BOX 107500, ANCHORAGE, ALASKA 99510-7500 (907) 265-2456

PROJECT :

**BILL SHEFFIELD**
**AIRPORT RAILROAD DEPOT**

TITLE:

**SECOND FLOOR**
**FLOOR PLAN**

| REV. | DATE | BY | REVISION |
|---|---|---|---|
| | | | |

DESIGNED BY:
DRAWN BY:
CHECKED BY:
APPROVED BY:

SCALE : 1/16"=1'-0"

DATE : FEBRUARY 2004

AFE NO.:
ACAD FILE: Level 2 flrpln
DWG NO. 3 OF 3